CAD FILE:

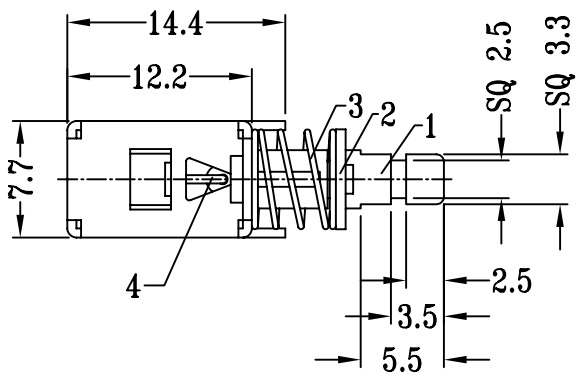

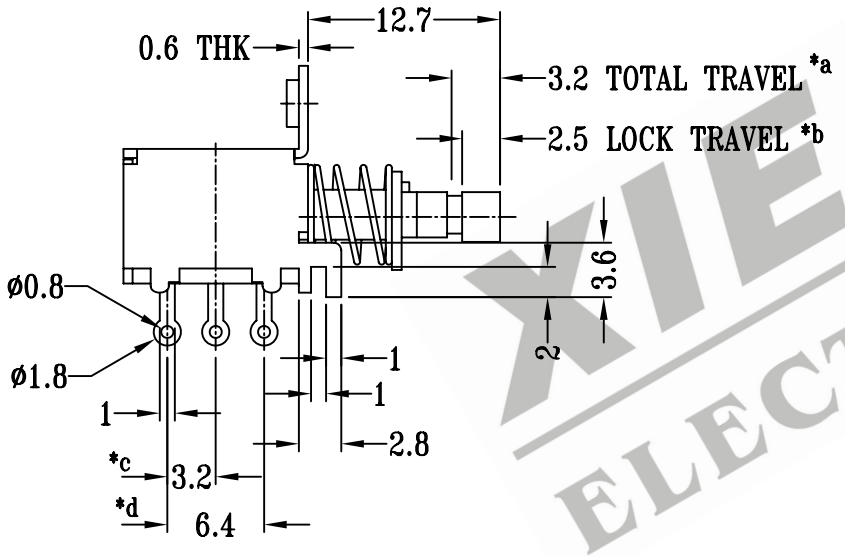

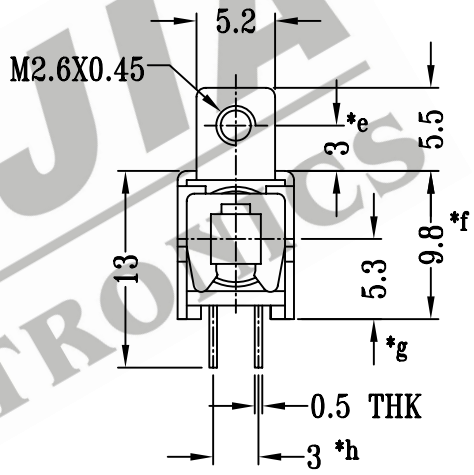

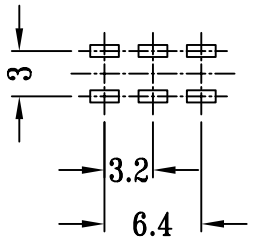

P.C.B LAYOUT

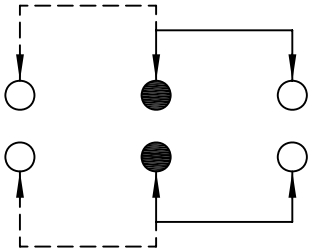

SCHEMATIC (NON-SHORTING)

注:带"*"表示关键尺寸(8个)

NO.	PARTS	MATERIALS	Q'TY	FINISH
9	CONTACT CLIP	PBS STRIP	2	Ag PLATED
8	TERMINAL	BRASS STRIP	6	Ag PLATED OVER Ni PLATED
7	BASE	PHENOLIC RESIN	1	NATURAL
6	FRAME	STEEL STRIP	1	Ni PLATED
5	SPRING PLATE	PBS STRIP	1	NATURAL
4	LOCK NEEDLE	PBS WIRE	1	NATURAL
3	SPRING	STEEL WIRE	1	Ni PLATED
2	BLOCK	STEEL STRIP	1	Ni PLATED
1	KNOB	POM	1	BLACK

TOLERANCE UNLESS SPECIFIED
WITHIN: 1.5±0.1mm
OVER : 1.5±0.2mm

SHENZHEN XIEJIA ELECTRONICS CO.,LTD.

ISSUE	DATE	DESCRIPTIONS OF REVISION	APPD.

TITLE : PUSH SWITCH
UNIT : mm
DRWG NO.: XJ-DR-PS22F20-00
MODEL: PS-22F20 (LOCKED)
SCALE: 2 : 1

DWN.	ZHOUYU	2005-5-19
CHK'D	FANGYING	2005-5-19
APPD.	KANGXINAN	2005-5-19

ALL MATERIALS MUST BE COMPLIANT TO ROHS

XIEJIA ELECTRONICS